How to Make a Light Box

Large (24" x 24") heavy duty light box that is easy to build and strong enough for leaning on.

My light box is made with 1x10 piece of lumber cut in 3 equal cuts to make 4 --- 24" long boards. For a lower and lighter weight box you could use a 1x4 board. I had my lumber company make the three cuts. I then screwed the corners together to form a box. I had the lumber company cut a 1/4" thick piece of Plexiglas to make a sturdy see through top.

Drill holes and screw Plexiglas to the top of your box. For the light I chose a florescent undercounter light. They are easy to screw into the inside of the box. They are also low heat and much nicer than incandescent light. They have an off/on switch right on the light.

I chose to make my light box tall so I don't have to bend much when using it on a table. It does make it heavier though. I also put drawer pulls on two sides to make it easier to lift. Those would be optional.

I designed this to be the easiest to make from one board. It is sturdy and I often take it to retreats for everyone to use. It is also safe for small children to use when tracing.

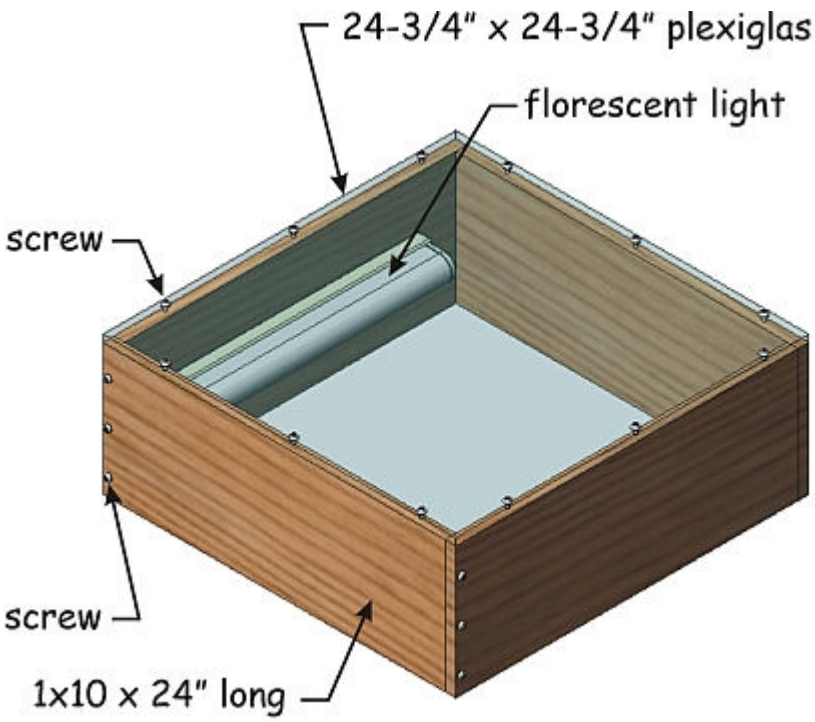

QuiltCampus
www.quiltcampus.net
Where quilters learn and have fun. On-line classes and live chat!

Copyright © 2006 QuiltCampus, PO Box 182671, Arlington TX, 76096-2671, USA

QuiltCampus gives you the permission to print and publish this information in your quilty newsletter. All information inside the red box must be printed as is and without any changes.